Alpha Place, Garth Road
Morden, Surrey
SM4 4LX England

(T): +44 208 337 2945
(E): sales@croxsons.com
WWW.CROXSONS.COM
Registered Office as above. Registered No: 71941

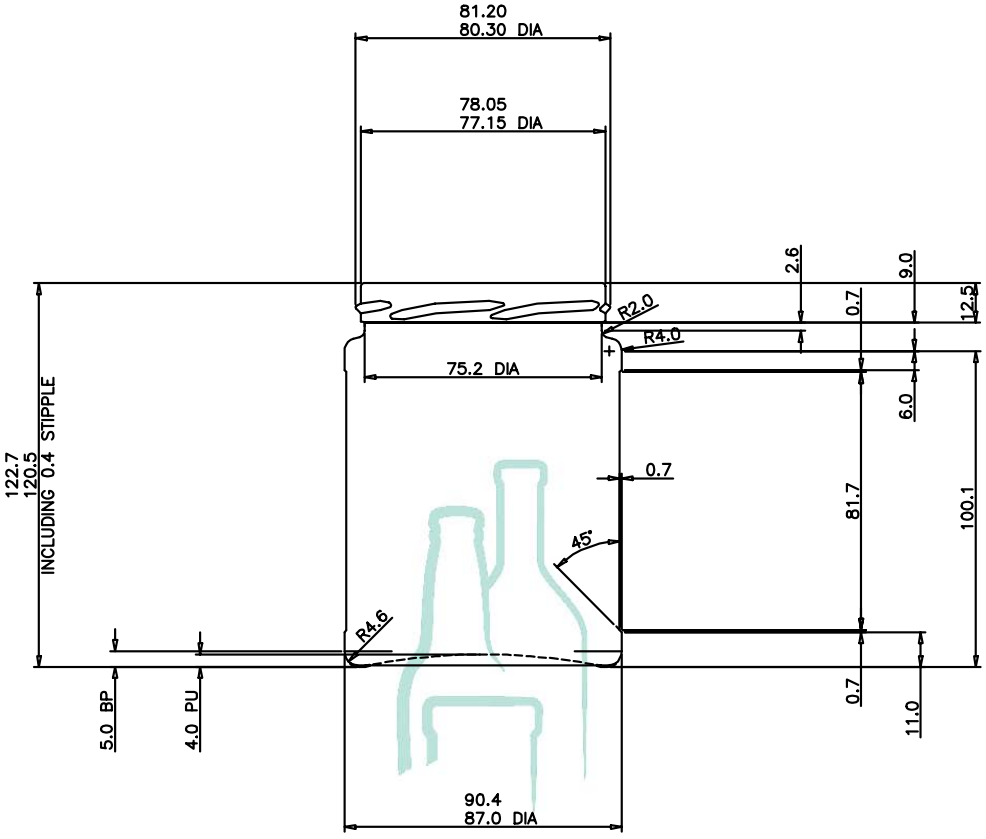

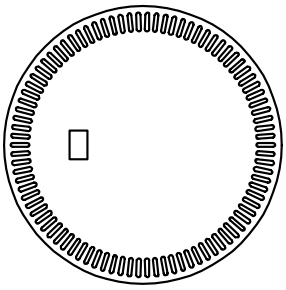

VIEW ON BASE
SHOWING EMBOSSED MARKING
STANDING AREA EMBOSSED
WITH RADIAL BAR STIPPLE

DESCRIPTION:	500ml Panelled Food Jar			ITEM CODE:	CRBC0851
COLOUR:	Flint			WEIGHT:	330g
NOMINAL CAPACITY:	500ml	BRIMFULL CAPACITY:	504.5 ± 4.5mm	CLOSURE:	82mm Twist Off
HEIGHT:	122.7 ± 0.4mm	DIAMETER:	90.4mm ±	FILL HEIGHT:	Mm
LABEL PANEL:	81.7mm	CARBONATION:	Nil	VACUITY:	ml ¦ %
PALLET HEIGHT:	1.165m	PALLET WEIGHT:	465Kg	UNITS PER PALLET:	1304 – 8 Layers
DRAWING CHECKED:	Runciman	DATE CHECKED:	214.03.2011	DRAWING REF:	CRBC0851.01

All measurements are approximate unless tolerances stated then are in accordance with ISO9058:2008, E&OE excepted.
Clients should run trials and check physical samples prior to any full scale production.